ALPHA MICROSYSTEMS
RIGHT. FROM THE START.

AM-318-10
8-Port Serial I/O Board
Installation Instructions

PDI-00318-10, A00

FIRST EDITION: March 1998

To re-order this document, request part number PDI-00318-10

FCC Notice

This equipment has been tested and found to comply with the limits for a Class A digital device, pursuant to Part 15 of the FCC Rules. These limits are designed to provide reasonable protection against harmful interference when the equipment is operated in a commercial environment. This equipment generates, uses and can radiate radio frequency energy and, if not installed and used in accordance with the instruction manual, may cause harmful interference to radio communications. Operation of this equipment in a residential area is likely to cause harmful interference in which case the user will be required to correct the interference at his own expense.

Canadian Department of Communications Compliance Statement

This equipment does not exceed Class A limits per radio noise emissions for digital apparatus set out in the Radio Interference Regulations of the Canadian Department of Communications. Operation in a residential area may cause unacceptable interference to radio and TV reception requiring the owner or operator to take whatever steps are necessary to correct the interference.

Avis de Conformité aux Normes du Ministère des Communications du Canada

Cet équipment ne depasse pas les limits de Classe A d'émission de bruits radioélectriques pour les appareils numeriques tels que prescrites par le Règlement sur le brouillage radioélectrique établi par le ministère des Communications du Canada. L'exploitation faite en milleu résidential peut entrainer le brouillage des réceptions radio et tele, ce qui obligerait le propriétaire ou l'opératour à pendre les dispositions nécessaires pour en éliminer les causes.

Battery Warning

CAUTION: Danger of explosion if battery is incorrectly replaced. Replace only with the same or equivalent type recommended by the manufacturer. Discard used batteries according to the manufacturer's instructions.
ATTENTION: Il y a danger d'explosion s'il y a replacement incorrect de la batterie. Remplacer uniquement avec une batterie du même type ou d'un type recommandé par le constructeur. Mettre au rébut les batteries usagées conformément aux instructions du fabricant.

For AM-6000 systems, replace batteries with Panasonic or Ray-O-Vac BR1225 only. Use of another battery may present a risk of fire or explosion. Replacement batteries may be ordered from your authorized Alpha Micro reseller.

Electrical Warning

This equipment contains components that can be damaged by static electricity. Follow all electronic discharge precautions when handling the equipment. For example, touch the metal back panel of the CPU or peripheral chassis to dissipate any electrical charge before touching the circuit boards or equipment within the chassis. After turning off power, before you open your computer chassis, unplug the cord from the electrical outlet to guard against electrical shock.

SOFTWARE SECURITY DEVICE IDENTIFICATION NUMBER: _____

The Alpha Micro Software Security Device (SSD) is a customized integrated circuit that personalizes the computer, providing identity verification for it. Certain Alpha Micro and non-Alpha Micro software may require that your computer contain an SSD in order to run software that has been customized to run only on your computer.

Please enter the identification of your SSD above. The SSD identification number should be on your computer ID label under "SSD Serial No." (Another way of finding the number is to look at the SSD itself. The SSD is located in an integrated circuit location on the CPU board; its identification number is printed on the SSD itself.) Software vendors may ask you for the SSD number if they are customizing software to run only on your computer.

This document may contain references to products covered under the following U.S. Patent Number(s): 4,530,048

ALPHA MICROSYSTEMS
2722 Fairview Street
P. O. Box 25059
Santa Ana, CA 92704

Table of Contents

CHAPTER 1 - INTRODUCTION 1-1

AM-318-10 FEATURES 1-1
COMPATIBILITY 1-1
AM-318-10 CONFIGURATION 1-2
AM-90 CONFIGURATION 1-3
THE OVERALL INSTALLATION PROCESS 1-3

CHAPTER 2 - HARDWARE INSTALLATION 2-1

INSTALLATION OVERVIEW 2-1
REMOVING THE CHASSIS COVER 2-1
ACCESSING THE SYSTEM BOARD 2-2
REMOVING THE OLD I/O BOARD 2-4
ATTACHING THE AM-90 CARDS TO THE BACK PANEL 2-5
INSERTING THE AM-318-10 BOARD 2-7
AM-319(-00) I/O Expansion Slots 2-8
AM-319(-10) I/O Expansion Slots 2-9
Eagle 100 AM-137 I/O Expansion Slot 2-10
ATTACHING THE CABLES 2-10
ENABLING REMOTE RESET 2-12
FINISHING UP 2-12

CHAPTER 3 - SOFTWARE SETUP 3-1

MAKING A TEST INITIALIZATION FILE 3-1
INCREASING THE JOBS AND QUEUE BLOCKS 3-2
DEFINING THE AM-318-10 PORTS 3-2
Terminal Name 3-2
Interface Driver 3-2
Octal Port Number 3-3
Baud Rate 3-3
Terminal Driver 3-4
Buffer Sizes 3-4
SAMPLE INITIALIZATION FILE 3-5
TESTING THE NEW INITIALIZATION FILE 3-6
FINISHING THE INSTALLATION 3-6
REPLACING A BOARD CONTAINING PORT 0 3-6
ADDITIONAL DOCUMENTATION REFERENCES 3-7

APPENDIX A - EXTERNAL CABLING A-1

BUILDING YOUR OWN CABLES A-6

List of Figures

Figure 1-1: AM-90 RJ-45 Ports 1-1
Figure 1-2: AM-318-10 Layout 1-2
Figure 1-3: AM-90 Layout 1-3
Figure 2-1: Deskside Chassis Cover Removal 2-2
Figure 2-2: Roadrunner Mounting Bracket 2-3
Figure 2-3: Locating the Main Electronics Board 2-4
Figure 2-4: Eagle 200 - 500 Back Panel Octal Port Numbering 2-6
Figure 2-5: AM-319 I/O Expansion Slots 2-8
Figure 2-6: AM-319(-10) I/O Expansion Slots 2-9
Figure 2-7: AM-137 I/O Expansion Slot 2-10
Figure 2-8: Cabling from AM-318-10s to AM-90s (viewed from top) 2-11
Figure A-1: PDB-00359-50 External Cabling Kit A-2
Figure A-2: PDB-00359-51 External Cabling Kit A-3
Figure A-3: PDB-00359-52 External Cabling Kit A-4
Figure A-4: PDB-00359-53 External Cabling Kit A-5
Figure A-5: PDB-00359-54 External Cabling Kit A-5
Figure A-6: PDB-00359-55 External Cabling Kit A-6

Chapter 1 - Introduction

The AM-318-10 is an eight-port serial I/O board you can use to attach terminals, printers, modems, or other RS232-compatible devices to your Alpha Micro Eagle computer. The AM-318-10 is actually an assembly (part number PDB-00318-10) made up of five separate parts:

- The AM-318-10 card itself, a SIMM module which connects to one of the I/O card expansion slots on your Eagle system motherboard.
- Two AM-90 Lightning boards. Each AM-90 connects to your computer's rear panel, providing four RJ-45 serial ports in one RJ-21 (Centronics-style) cutout, as shown here:

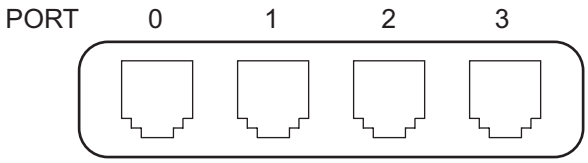

Figure 1-1: AM-90 RJ-45 Ports

- Two 40-conductor flat cables connecting the AM-318-10 card to the AM-90 cards.

AM-318-10 FEATURES

The AM-318-10 provides the following features:

- **Built-in RJ-45 ports**—The AM-318-10 provides eight RJ-45 jacks (four on each of two AM-90 cards), greatly simplifying most cabling situations when compared to the earlier AM-318-00. The pinouts for these ports are identical to those for the AM-359 ports. See Appendix A for pinout and cabling information.
- **Full modem control**—Each port on the AM-318-10 provides all the signals needed to work with an attached modem, including Data Terminal Ready and Data Carrier Detect.
- **Built-in lightning protection**—In addition to providing the four RJ-45 connectors, each AM-90 Lightning board provides built-in surge protection. An array of zener diodes mounted on the board guards against voltage surges caused by lightning strikes, accidental power line crossings, and other damaging electrical fluctuations.
- **Super I/O support**—When used with AMOS 2.x, all AM-318-10 ports support Super I/O, greatly increasing character throughput. Under AMOS 2.3 and later, Super I/O is a standard feature.

COMPATIBILITY

The AM-318-10 is compatible with the Eagle 100, 200, 300, 400, and 500: any Eagle computer which uses the AM-137, AM-319-00 or AM-319-10 board for serial I/O expansion.

The AM-318-10 is not compatible with:

- RS-422. If you currently have ports which use RS-422, you must change those ports to RS-232 if you move them to an AM-318-10. RS-422 is supported only on the AM-314 board.
- Remote Reset. If you are moving port 0 to an AM-318-10, and want remote reset ability, see the section “Enabling Remote Reset” on page 2-12.
- The Eagle 550 (Super Eagle).
- The AM-1600, even though the physical SIMM connectors in that computer are identical.

With the AM-318-10, the external ports are located on two AM-90 Lightning boards, as mentioned above. Each AM-90 occupies one Centronics-style (RJ-21) back panel cutout. Since some Eagle chassis back panels have only two or four Centronics cutouts, you may be limited to only one or two AM-318-10 assemblies in your computer. If this is a problem, you can order a new back panel, with more Centronics cutouts, from your Alpha Micro dealer.

AM-318-10 CONFIGURATION

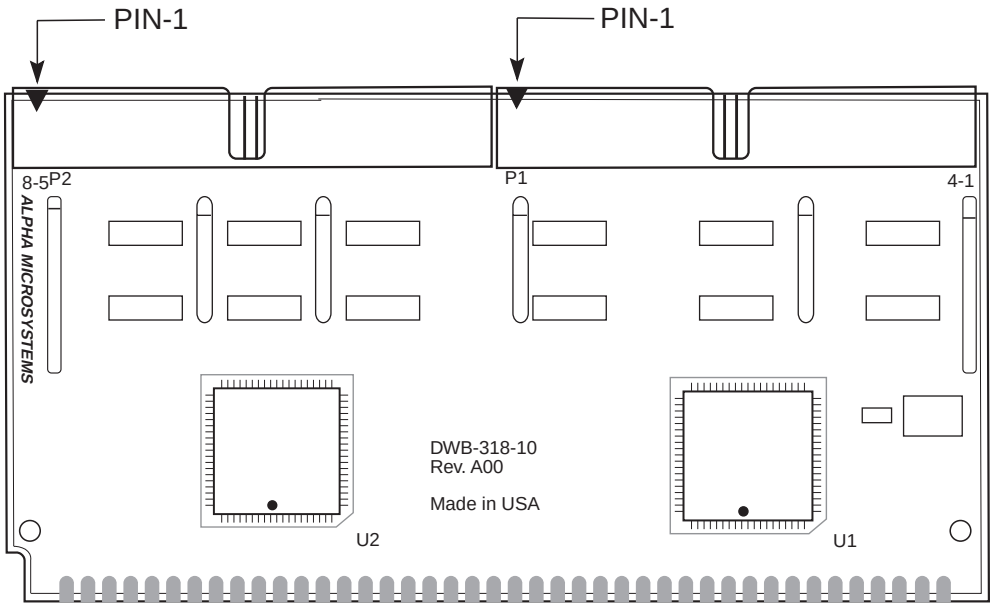

Figure 1-2: AM-318-10 Layout

Notice that there are no user-configurable jumpers on the AM-318-10. You do not need to check or change any hardware settings before beginning the installation. The flat cables to the AM-90 boards attach at P1 and P2. Notice that the port numbers for each connector (1-4 for P1 and 5-8 for P2) are shown on each side of the board.

AM-90 CONFIGURATION

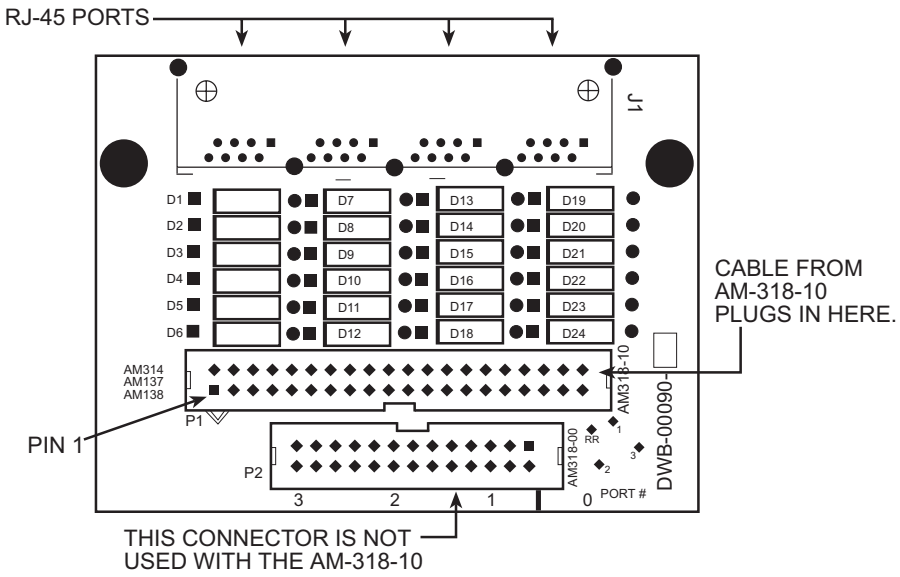

Figure 1-3: AM-90 Layout

When connecting to the AM-318-10, use only the 40-pin connector at P1 on the AM-90. The P2 connector is unused. There are no user-configurable jumpers to set or check on the AM-90.

THE OVERALL INSTALLATION PROCESS

Installing one or more AM-318-10 boards in your computer involves changes to both the system hardware and the software configuration. It is important to perform the procedures in chapters 2 and 3 in the correct order for your installation. Depending on your configuration, there are two possible orders for you to use:

- In all situations except when replacing an AM-314 board which contains port 0 (the boot port):
  1. Turn off your computer and install the new hardware as described in Chapter 2.
  2. Turn on the computer, which boots it using your existing initialization file. The ports on the AM-318-10 boards you just installed may or may not work at this stage, depending on your starting configuration.
  3. Make the initialization file changes described in Chapter 3, MONTST using the new initialization file, and rename it when you know the new ports are defined correctly.
- If you are replacing an AM-314 board containing port 0:
  1. You need to make one change to your initialization file before installing the new hardware. See the section “Replacing a board containing port 0” on page 3-6.
  2. Turn the computer off, and install the new AM-318-10 board(s), as described in Chapter 2.
  3. If you were using the remote reset feature of the AM-314, see the section “Enabling Remote Reset” on page 2-12.
  4. Turn the computer back on and follow the procedures in Chapter 3 to make the other changes to your initialization file.

Chapter 2 - Hardware Installation

This chapter discusses the hardware installation of the AM-318-10—how to add one or more of the boards to your Eagle computer. It covers installing the AM-318-10 itself, connecting it to the AM-90s, and attaching the AM-90s to the computer's back panel.

The final part of hardware installation, cabling from the RJ-45 ports on the back panel to external devices, is covered in Appendix A.

INSTALLATION OVERVIEW

The complete hardware installation for the AM-318-10 consists of these steps:

1. Opening your computer's enclosure.
2. In some Eagle configurations, moving the Roadrunner board to access the AM-319 system board.
3. If the AM-318-10 is replacing an existing I/O board, removing the old board.
4. Attaching the AM-90 cards to the back panel and plugging the 40-pin cables into them.
5. Inserting the AM-318-10 in the appropriate I/O slot.
6. Routing the 40-conductor flat cables from the AM-90s to the AM-318-10.
7. If necessary, replacing the Roadrunner board.
8. Closing the chassis.

If you are replacing an AM-314 board which contains port 0 (the boot port), you must make changes to your initialization file before installing the new hardware. See "Replacing a board containing port 0" on page 3-6. Also, if you were using the AM-314's remote reset capability, see "Enabling Remote Reset" on page 2-12.

Once you've completed these steps, covered in detail in the rest of this chapter, you can continue with the software setup discussed in Chapter 3 and external cabling as described in Appendix A.

REMOVING THE CHASSIS COVER

1. Power down your computer and unplug the power cord.
2. Unplug and label all external cables.
3. At the rear of the computer, remove the four screws that attach the top cover to the chassis.
4. Slide the top cover back and lift rear edge up (as indicated by the arrows on Figure 2-1). Remove the cover and place it out of the way.

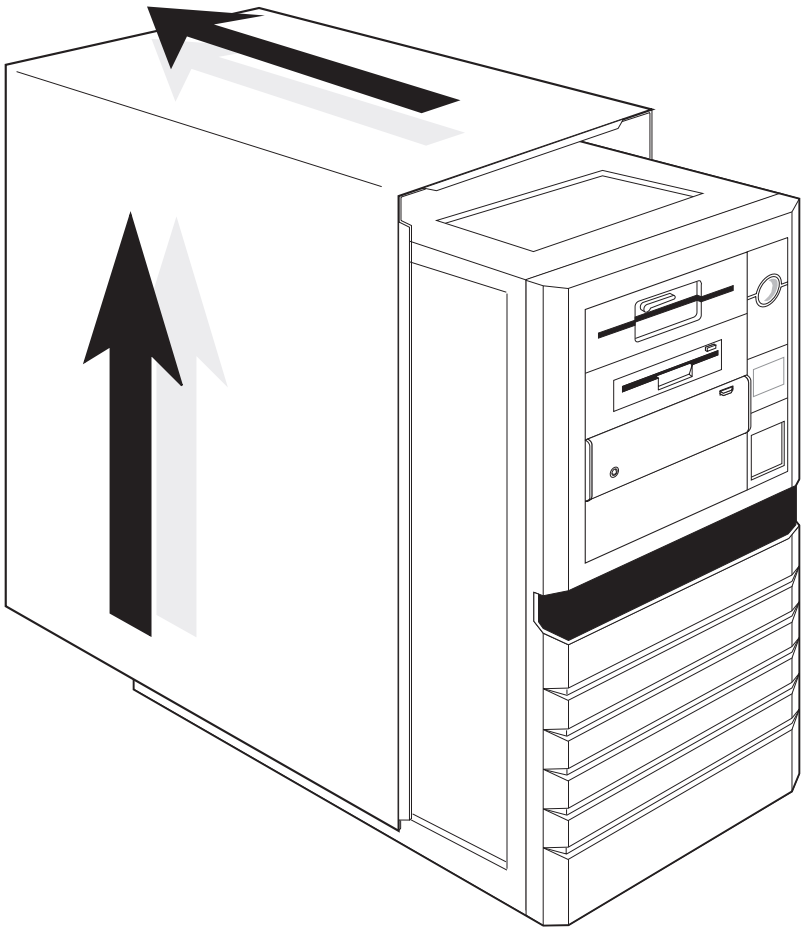

Figure 2-1: Deskside Chassis Cover Removal

ACCESSING THE SYSTEM BOARD

In some Eagle computers, access to the AM-319 system board may be blocked if your Roadrunner board is mounted vertically, as shown in the next two illustrations. If this is true for your computer, you need to remove the Roadrunner board and its mounting bracket in order to install your AM-318-10 board or boards. Instructions for doing this are shown in the illustrations.

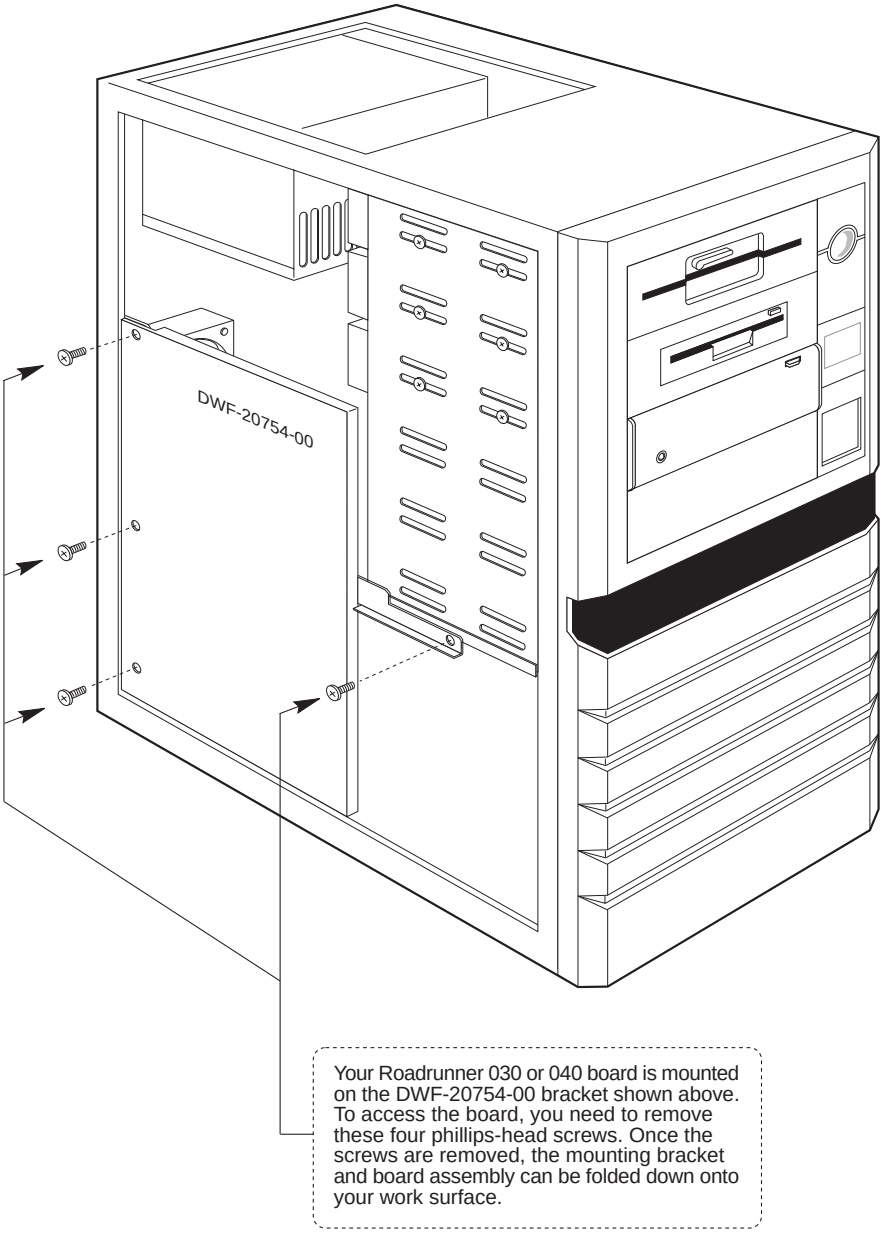

Figure 2-2: Roadrunner Mounting Bracket

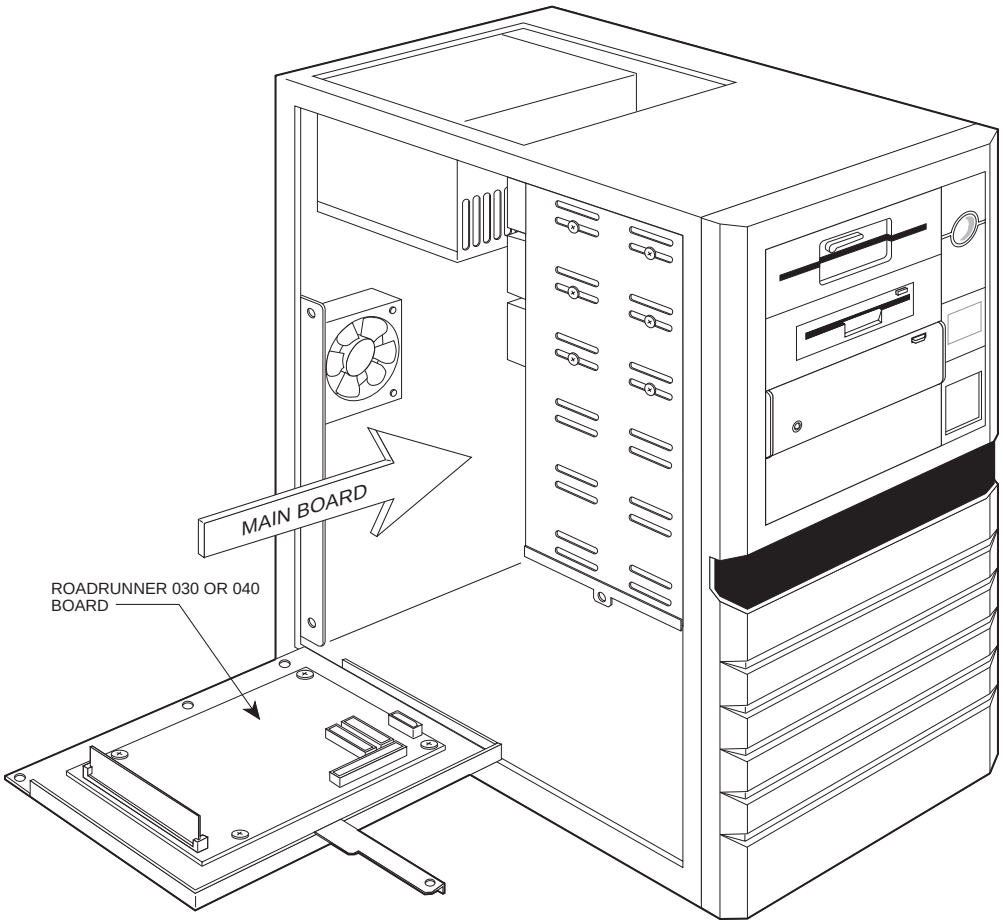

With the Roadrunner and its mounting bracket folded down out of the way, you will be able to access the AM-319 system board.

Figure 2-3: Locating the Main Electronics Board

REMOVING THE OLD I/O BOARD

If you are replacing an existing AM-314 or AM-318-00 board with the AM-318-10, remove the current board:

1. Unplug any connectors attached to the top of the board.
2. If your I/O boards are held in place by a shipping brace, remove the brace: loosen the screw securing the shipping brace in place against the rear of the front I/O board and rotate the brace so it sits parallel to the board.
3. Carefully push the small plastic tabs on each end of the I/O SIMM connector toward each end of the connector so the board is free to lean toward the front of the system. Do not force the board toward the front—when the connector tabs have disengaged the board, it should easily tip toward the front of the computer. ***Forcing the board may permanently damage the connector.***
4. Once the board is tipped, it should easily slide out of the connector.

If you are replacing an AM-314 board, check to make sure none of the ports you're replacing were set for RS-422 operation. There are four sets of three jumpers each at the top of the AM-314, labeled W0 through W3. If any of these sets of three is jumpered to the left, the corresponding port is set for RS-422, and the AM-318-10 will not work with that port as it is currently configured. Stop, and contact your dealer or the Alpha Micro Technical Assistance Center for help.

ATTACHING THE AM-90 CARDS TO THE BACK PANEL

Each AM-318-10 board supports two AM-90 cards and therefore uses up two Centronics-style (RJ-21) cutouts on the back panel, as noted in Chapter 1. Before discussing the procedure for physically connecting the AM-90, let's discuss board arrangements and the resulting port numbering.

Assuming you add AM-318-10s to your computer in the order listed later in this chapter (that is, using J8 first on an AM-319-00 and J7 first on an AM-319-10), you should place the AM-90s into your back panel starting with the bottom slot and working up. With an AM-319-00, AM-90s in the bottom two slots would attach to the AM-318-10 in J8, the next two would attach to the one in J9, and so on.

Cabling the AM-318-10s in this manner means that, for all Eagle models except the Eagle 100, port 0 is at the bottom left of the back panel, with port numbers going up from left to right and bottom to top: the bottom slot is ports 0 - 3, the next slot is 4 - 7, and so on. See Figure 2-4.

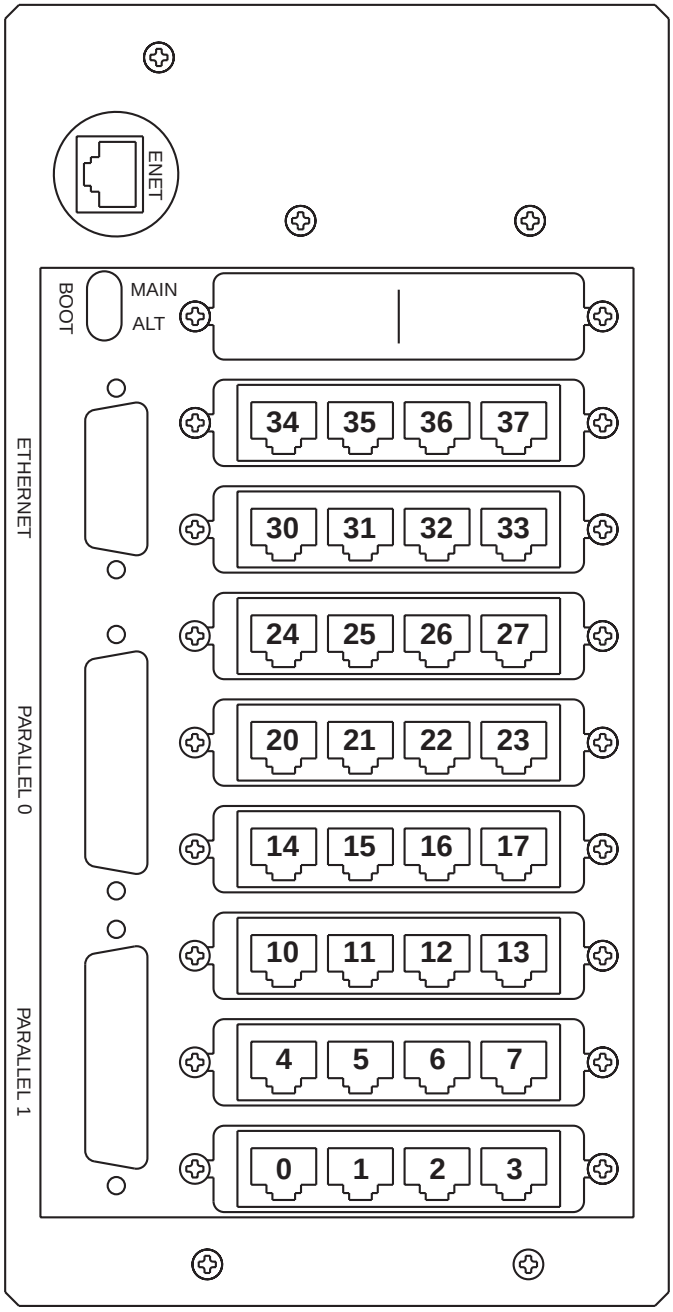

Figure 2-4: Eagle 200 - 500 Back Panel Octal Port Numbering

This is a change from previous Alpha Micro-recommended configurations with the AM-318-00 and AM-314 I/O boards. With those boards and the old-style Eagle back panels, we recommended you install AM-314s, if present, in the first I/O connectors (J8 on an AM-319-00). In these configurations, the back panel ports were generally numbered from the top down, so port 0 was in the top-most slot.

For the Eagle 100, port 0 is the first port found on the AM-137 system board, and is still one of the DB-9 connectors near the top of the back panel.

If you are adding AM-318-10s to a computer which has one or more AM-314s in it, we suggest you leave the AM-314(s) in their current slots, and add the AM-318-10s in the unused connectors. This minimizes the software changes you need to make, since the AM-314 ports will keep their current numbers.

Once you've decided where the AM-90 cards for your AM-318-10 are going to be located, follow this procedure to attach them to the back panel:

1. Attach an AM-90 to the bottom rear panel slot using the two star-washered screws provided.
2. Take a 40-conductor flat cable and plug it into the matching connector at P1 on the AM-90. Be sure the pin-1 orientation is correct—see Figure 1-3. The red stripe on the cable marks pin 1.
3. Lay the cable out so you can get to it easily. You'll route it and attach it to the AM-318-10 connector later.
4. Install another AM-90 in the next-highest rear panel slot, following the same directions.
5. Repeat this procedure for any additional AM-90s, working from the bottom of the rear panel up.

INSERTING THE AM-318-10 BOARD

The Eagle's I/O expansion slots are very similar to the type of slots that memory SIMM modules plug into. Insert the AM-318-10 board into the appropriate slot with the component side of the AM-318-10 board facing your computer's rear panel. To do so:

1. Insert the AM-318-10 into the expansion slot at a slight angle.
2. After you feel the board settle into the slot, rotate it into an upright position. When the AM-318-10 is properly positioned, the retainer clips at each end of the expansion slot will click into position, locking the board in place.

   Very little force is required to install an AM-318-10 board. If you're having problems installing the board in the expansion slot, ***DO NOT TRY TO FORCE IT!*** The expansion slot connectors are fragile and can be broken by excessive force. Stop, and take a moment to examine both the AM-318-10 and the slot. Make sure you are installing the AM-318-10 with the component side facing your computer's rear panel.

3. If your computer has a shipping brace to hold the I/O boards in place, replace it:
   - If you changed the total number of I/O boards, remove it and re-install it using the proper mounting hole for the new number of boards.
   - Rotate the brace back to its original orientation and push the brace toward the rear of the system so the end of the brace presses firmly against the back of the I/O SIMM board. While holding the brace in place, retighten the screw, securing the brace in its original position.

The following sections show the three system boards which support the AM-318-10. Each has a different number of available I/O expansion slots. Refer to the sections below for the number and location of the expansion slots on your system board, and which order to fill the slots in.

AM-319(-00) I/O Expansion Slots

The AM-319 board is used in the Eagle 300, 400, and 500. The following illustration shows the four serial I/O expansion slots: J8, J9, J10, and J11. As indicated, the first I/O board installs in J8, the second in J9, the third in J10, and the fourth in J11.

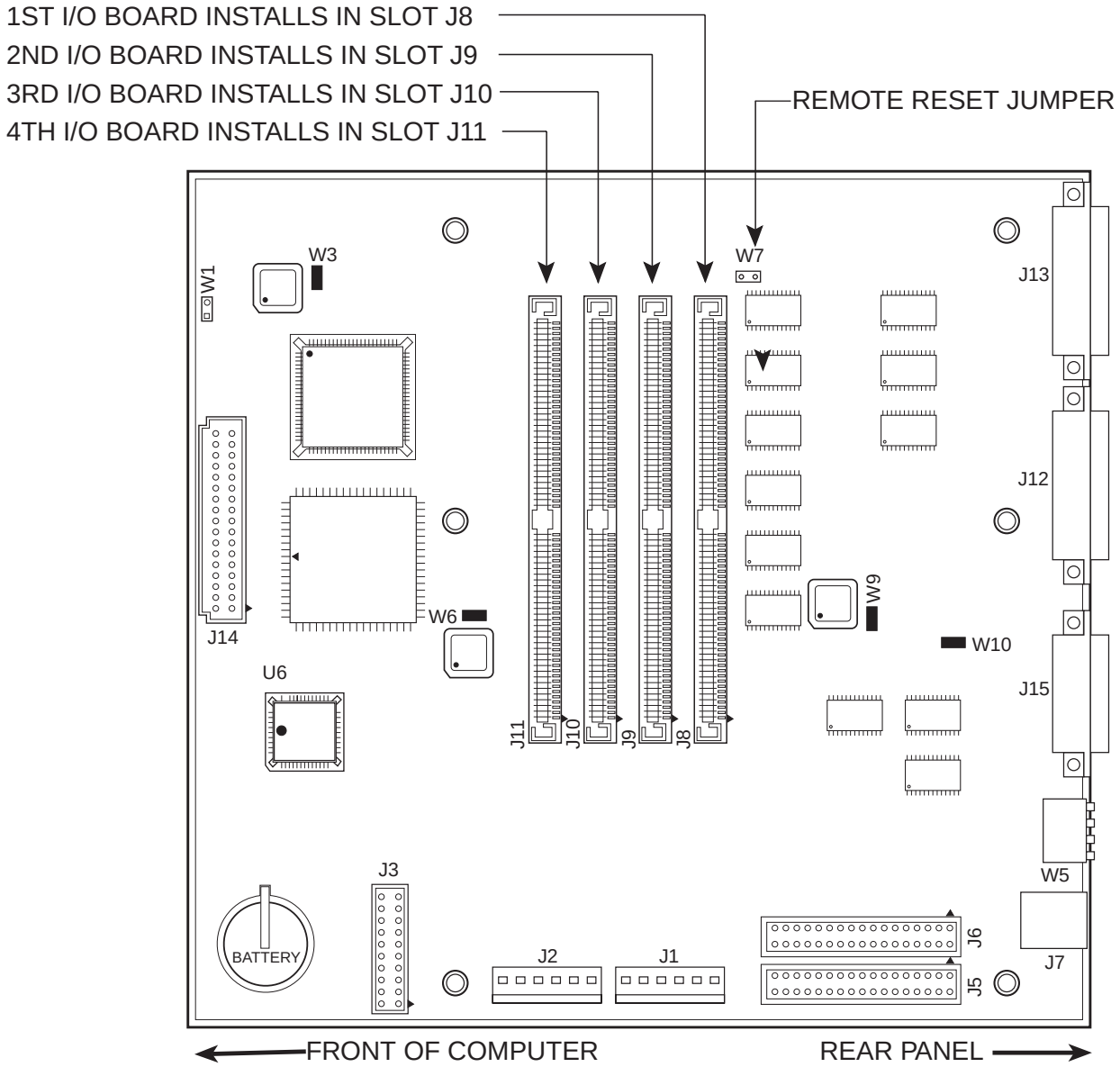

Figure 2-5: AM-319 I/O Expansion Slots

AM-319(-10) I/O Expansion Slots

The AM-319(-10) board is used in the Eagle 200. The illustration below shows the two serial I/O expansion slots: J6 and J7. As indicated, the first I/O board installs in J7 and the second in J6.

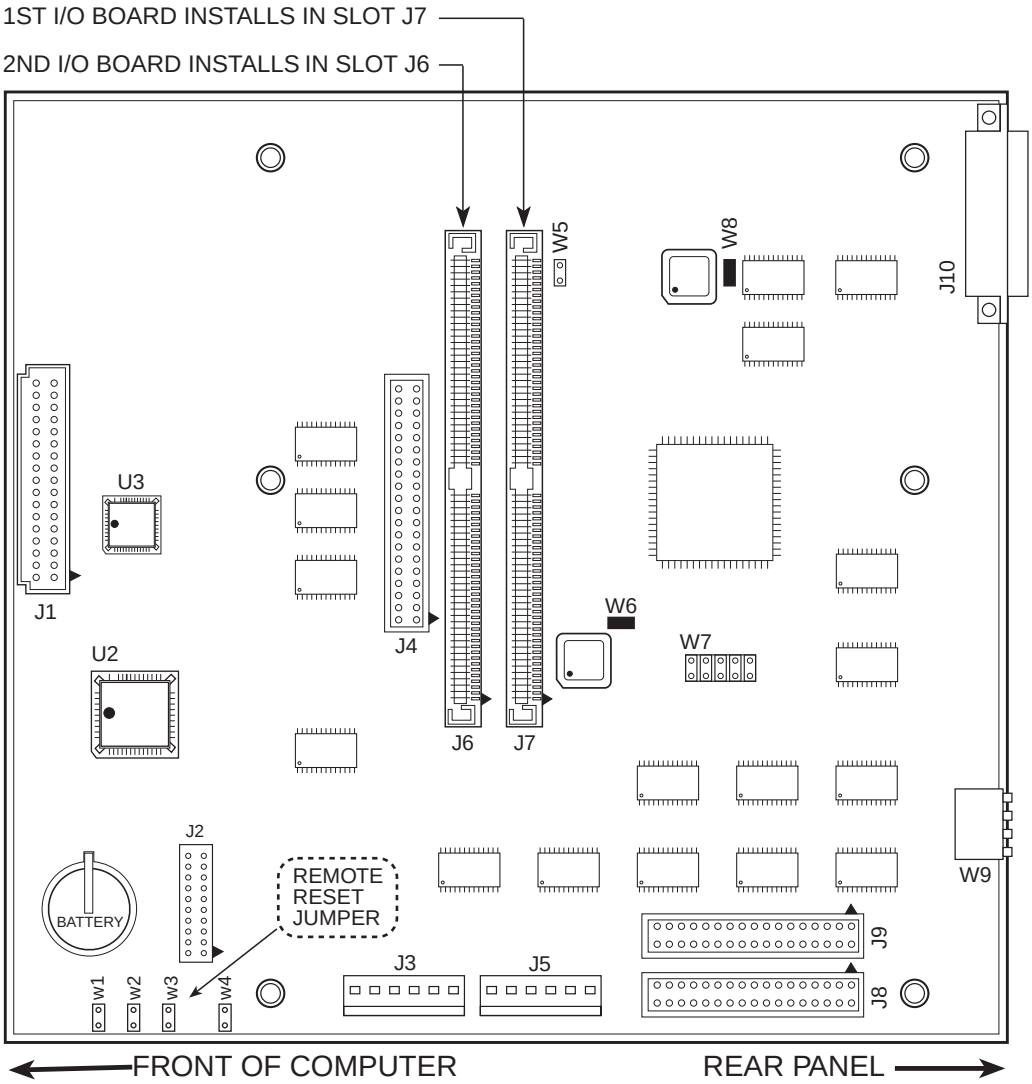

Figure 2-6: AM-319(-10) I/O Expansion Slots

Eagle 100 AM-137 I/O Expansion Slot

The AM-137 board illustration shows the one serial I/O expansion slot at location J6.

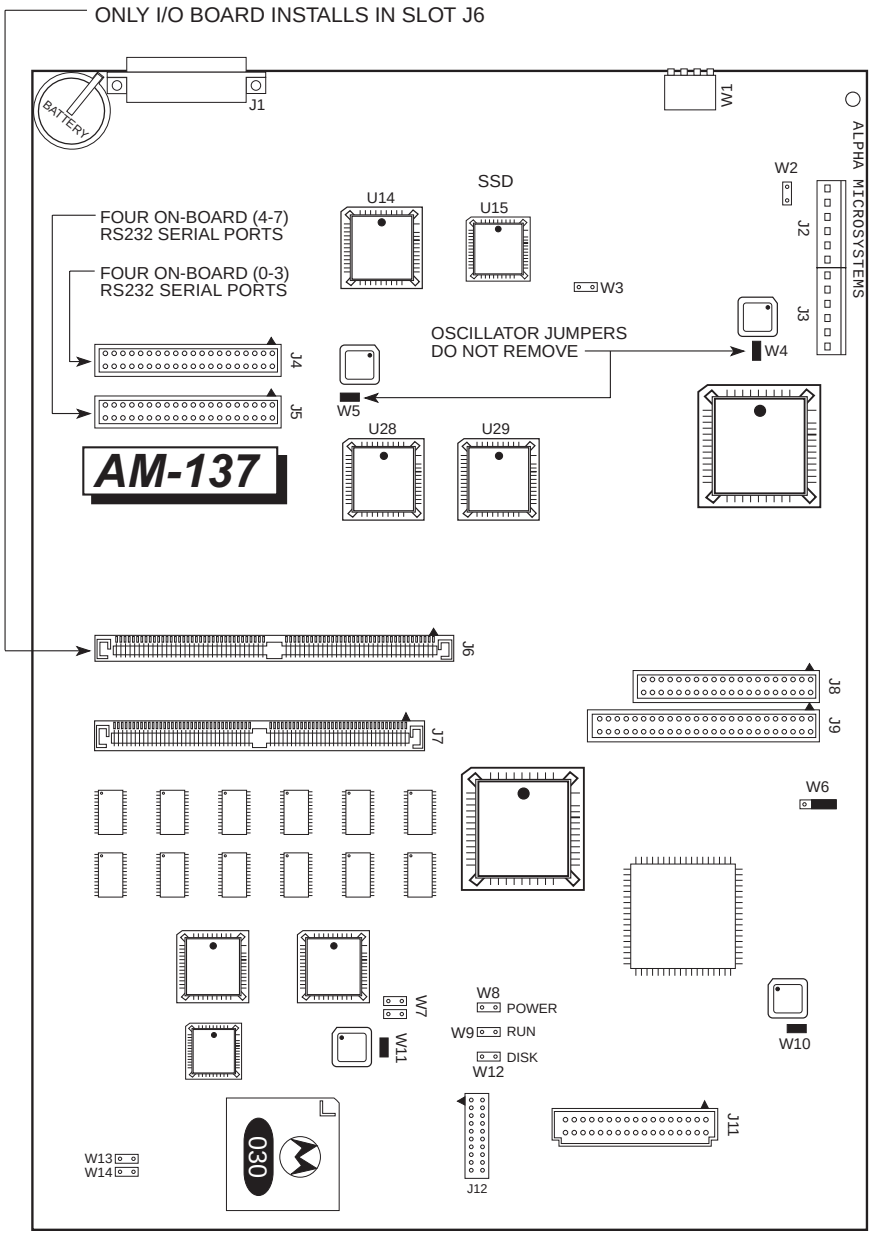

Figure 2-7: AM-137 I/O Expansion Slot

ATTACHING THE CABLES

You have now installed both the AM-90 boards and the AM-318-10 boards. All that's left is to connect them using the 40-pin flat cables. One end of each cable should already be attached to an AM-90 board. You'll now attach the bottom two AM-90s to the first AM-318-10, and so on, following this procedure:

1. Take the cable from the bottom AM-90 and plug it into the P1 connector on the first AM-318-10. Be sure the red stripe marking pin 1 is oriented correctly; see Figure 1-2.

Support the AM-318-10 as much as possible as you do this; applying too much pressure as you plug in the cable could damage the card or the connector on the system board.

2. Plug the cable from the next higher AM-90 it into the P2 connector on the first AM-318-10. Again, make sure the pin 1 alignment is correct, and support the AM-318-10 as you plug it in.
3. Repeat this procedure for any additional AM-318-10s, working from the bottom of the rear panel up, and from the first AM-318-10 (the one closest to the rear panel) to the last. Route the cables as shown in Figure 2-8.

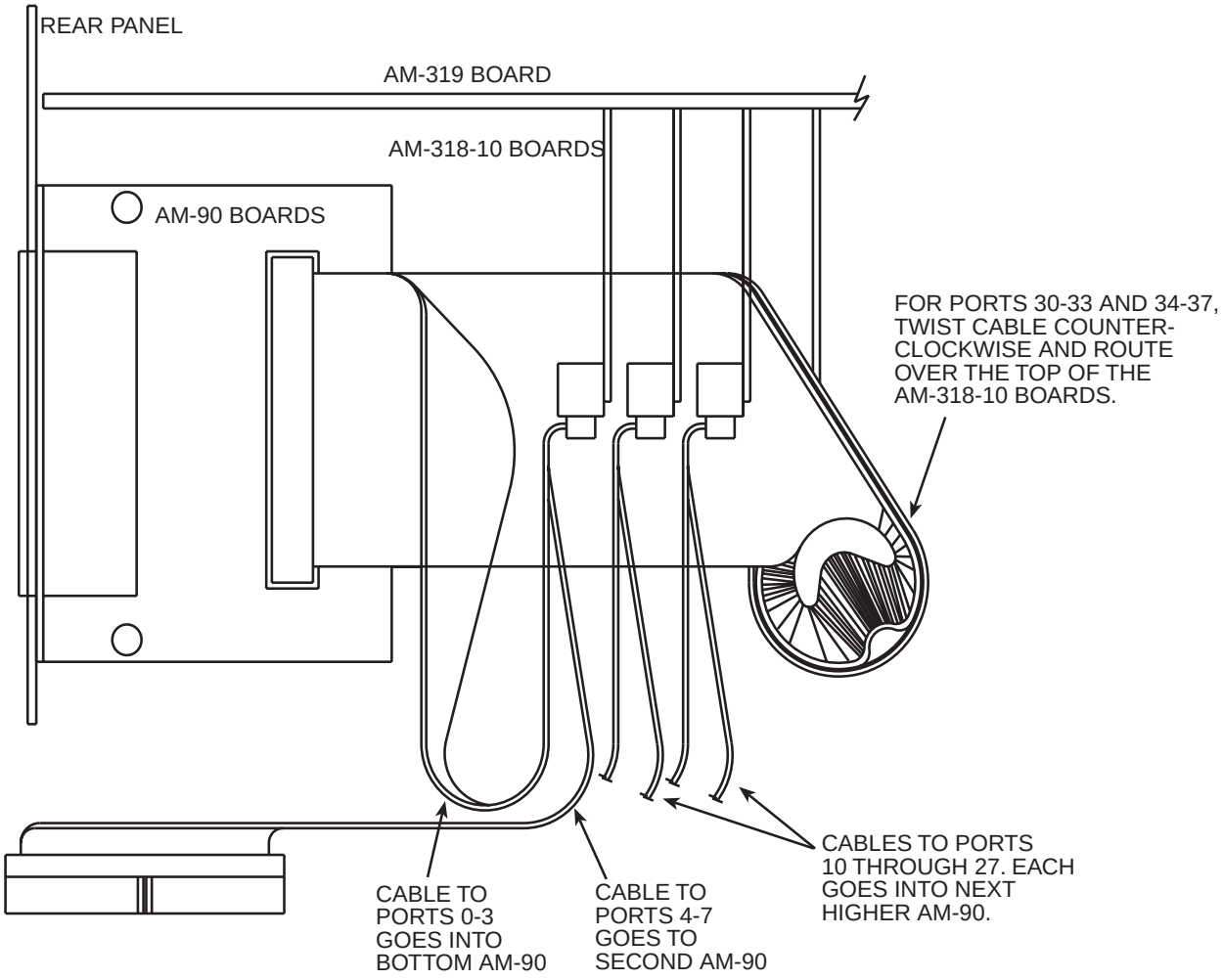

Figure 2-8: Cabling from AM-318-10s to AM-90s (viewed from top)

Each cable from the first three AM-318-10 boards loops toward the side of the chassis, then up and over the previous cables. The two cables from the last AM-318-10 loop counter-clockwise and go over the top of the AM-318-10s to the top two AM-90s.

ENABLING REMOTE RESET

The AM-318-10 does not allow remote reset as supported by the AM-137 and AM-314 boards. If you are moving port 0 of your computer from an AM-314 to an AM-318-10, you can keep a remote reset ability by purchasing a special cable from Alpha Microsystems, part number DWB-10323-00.

If you are removing an AM-314 and don't want to enable remote reset, you must remove the remote reset jumper from your system board. See Figure 2-5 or 2-6 for the location of the jumper on the AM-319-00 or AM-319-10 board, respectively.

You must either remove the remote reset jumper or install the cable mentioned above. If you leave the remote reset jumper in place, port 0 is on an AM-318-10 board, and the remote reset cable is not installed, ***your computer will not boot***.

FINISHING UP

Once you have all the AM-318-10s and AM-90s installed and cabled, replace your Roadrunner board if you had to remove it. Then, you can attach the cables from the back panel to your external devices: terminals, printers, modems, etc. See Appendix A for pinouts and cabling information. Then, continue with the software setup in Chapter 3. You may want to leave the computer's cover off until you finish the setup and confirm that all ports are working properly.

Chapter 3 - Software Setup

Besides physically installing the AM-318-10 board(s), you need to modify your AMOS system configuration to define the ports on each new board to the operating system. You do this by modifying the system initialization command file, as described in this chapter. You need to do the following:

1. If you are increasing the total number of ports on the computer, increase the number of jobs allocated and the number of queue blocks available.
2. Define each serial port to the operating system through a TRMDEF statement.

The general procedure for doing this is:

1. Make a copy of the system initialization command file.
2. Make the changes to the copy of the file.
3. Use MONTST to boot your computer using the modified initialization file.
4. When the computer operates correctly using the new file, rename it so it is the standard initialization file.

If you're replacing the first AM-314 board in a system (the one containing ports 0-3, you need to change your initialization file both ***before and after*** you install the new AM-318-10 board. See "Replacing a board containing port 0" on page 3-6.

The rest of this chapter describes the software setup procedure in detail.

MAKING A TEST INITIALIZATION FILE

To make a copy of your AMOS32.INI file, type:

```
LOG 1,4 RETURN
COPY TEST.INI=AMOS32.INI RETURN
```

DO NOT MODIFY THE AMOS32.INI file directly. You may be unable to reboot the computer if you make a mistake.

View the TEST.INI file:

```
VUE TEST.INI RETURN
```

You can now safely make the changes described in the following sections to the TEST.INI file.

INCREASING THE JOBS AND QUEUE BLOCKS

If you are increasing the total number of ports on your computer (not just replacing ports which used to be on another type of board with the AM-318-10 ports), you need to make sure the total number of jobs assigned by the JOBS statement is increased by the number of ports you're adding. For example, if you're adding two AM-318-10 boards (a total of 16 ports), increase the number of jobs in the JOBS statement by 16.

You must also add some additional JOBALC statements, so there is a job name defined for each serial port being used. In the example file below, we use names like JOB1, JOB2, etc. However, you could just as easily use TOM, DICK, HARRY, etc.

When adding users to your computer, make sure you do not exceed your AMOS user license. If you need to increase your user license, please contact your Alpha Microsystems dealer.

Eagle computers require a relatively large number of queue blocks. When adding serial ports, you need to increase the queue block allocation. Each additional port requires about 13 queue blocks, so increase your allocation accordingly. For 16 added ports, you would need to add about 208 queue blocks.

DEFINING THE AM-318-10 PORTS

You define each port on the AM-318-10, as you do all other AMOS serial ports, by using a TRMDEF statement in the initialization file. Here are two sample TRMDEFs for AM-318-10 ports:

```
TRMDEF TERM2,A31810=0:19200,AM65,100,100,100   ;(AM-65 Terminal)
TRMDEF TERM3,A31810=1:19200,AM75,100,100,100   ;(AM-75 Terminal)
```

We'll use the first sample above as an example as we define each part of the TRMDEF statement in the following sections. Following those definitions, you must add a TRMDEF statement for each AM-318-10 port you want to use.

There are optional elements in a TRMDEF statement which are not shown here. For a complete discussion of TRMDEF, please see the *System Operator's Guide to the System Initialization Command File.*

Terminal Name

A unique name assigned to each terminal, printer, or network connected to an I/O port. You cannot duplicate this name for any other TRMDEF statement. In our example, this is **TERM2**.

Interface Driver

The interface driver for the AM-318-10 is **A31810.IDV**. All ports on the AM-318-10 must use this interface driver.

If you do not have the A31810.IDV file on your computer, you can download it from the 12/97, or later, AlphaCD.

Octal Port Number

In our sample, this is **0**. This indicates it is the first port on the first serial I/O card. The port number depends on the location of the AM-318-10 in your computer, and on which port on the AM-318-10 the statement is defining. See the table below for your system board to determine the right octal port numbers for each AM-318-10 in your computer:

AM-319-00

Expansion Slot	Port Numbers
J8	0 - 7
J9	10 - 17
J10	20 - 27
J11	30 - 37

AM-319-10

Expansion Slot	Port Numbers
J7	0 - 7
J6	10 - 17

AM-137

Expansion Slot	Port Numbers
J6	10 - 17

For each board, the lowest port number is at port #1 on the board, counting up in order. For example, if you have an AM-318-10 in slot J9 of an AM-319-00 system board, its port 1 is octal port 10, its port 2 is octal port 11, and so on. Port numbers are marked just below the connectors on both sides of the AM-318-10.

You must use these octal port numbers even if it means you will be “skipping” some port numbers. For example, if you have an AM-314 board in slot J8 of an AM-319-00, which uses only port numbers 0 - 3, you must still use port numbers 10 - 17 for an AM-318-10 in slot J9, even though this means port numbers 4 - 7 are unused.

See the sample initialization file, later in this chapter, for more examples of assigned port numbers.

Baud Rate

Each port must be assigned a baud rate. In our example, the baud rate is **19200**. For the purposes of assigning baud rates, the AM-318-10 can be viewed as four independent pairs of serial I/O ports. The baud rates for each pair of ports are controlled by a corresponding set of registers in the Quad-UART used on the AM-318-10. The first set of registers controls the first two ports on the AM-318-10 board. The next set controls the next two ports, and so on. Because of this, the baud rates for the ports in a pair must be compatible with each other. That is, they must come from the same table below:

Table 1	Table 2
50	75
110	110
134.5	134.5
200	150
300	300
600	600
1200	1200
1050	2000
2400	2400
4800	4800
7200	1800
9600	9600
38400	19200

.
57600 baud is supported independent of the baud rate used on any other port.

When assigning baud rates to port pairs, follow these rules:

1. Choose the baud rate you want for the first port of the pair.
2. If this baud rate appears in both tables above—for example, if it's 9600—you can take the baud rate for the second port from either table.
3. If, however, the first baud rate appears only in one table—such as 19200—the rate for the second port must be from the same table.
4. If you assign a baud rate to the second port from the wrong table, the corresponding rate from the correct table is substituted and used instead of the rate you specified.

   For example, you choose 7200 baud for port 0. This selects table #1 for ports 0 and 1. If you then specify a baud rate of 19200 for port 1, which is found only in table #2, the computer substitutes the corresponding rate from table #1, and uses baud rate 38400 for port 1.
5. The baud rates for each pair of ports are independent of any other pair. You may use table #1 for ports 0 and 1, table #2 for ports 2 and 3, and so on.

Terminal Driver

This depends on the type of terminal or other device connected to this port. In our sample, it is **AM65**.

Buffer Sizes

These vary depending on the terminal or device type, but **100,100,100**, as shown in the sample, is usually satisfactory.

SAMPLE INITIALIZATION FILE

Look at the statements in bold in the following system initialization command file for examples of the type of statements you need to add. This system initialization command file is only a sample—the exact contents of the file differ depending on your computer.

This file assumes an Eagle 300 with two AM-318-10 boards installed for a total of 16 serial ports.

```
:T
JOBS 30
JOBALC JOB1,JOB2,JOB3,JOB4,JOB5,JOB6,JOB7,JOB8,JOB9,JOB10
JOBALC JOB11,JOB12,JOB13,JOB14,JOB15,JOB16,JOB17,JOB18
JOBALC JOB19,JOB20,JOB21,JOB22,JOB23,JOB24
;
QUEUE 590
;
TRMDEF TERM1,A31810=0:19200,AM-65,100,100,100
TRMDEF TERM2,A31810=1:19200,AM-65,100,100,100
TRMDEF TERM3,A31810=2:19200,AM-65,100,100,100
TRMDEF TERM4,A31810=3:19200,AM-65,100,100,100
TRMDEF TERM5,A31810=4:19200,AM-65,100,100,100
TRMDEF TERM6,A31810=5:19200,AM-65,100,100,100
TRMDEF TERM7,A31810=6:19200,AM-65,100,100,100
TRMDEF TERM8,A31810=7:19200,AM-65,100,100,100
TRMDEF TERM9,A31810=10:19200,AM-65,100,100,100
TRMDEF TERM10,A31810=11:19200,AM-65,100,100,100
TRMDEF TERM11,A31810=12:19200,AM-65,100,100,100
TRMDEF TERM12,A31810=13:19200,AM-65,100,100,100
TRMDEF TERM13,A31810=14:19200,AM-65,100,100,100
TRMDEF TERM14,A31810=15:19200,AM-75,100,100,100
TRMDEF TERM15,A31810=16:19200,AM-75,100,100,100
TRMDEF TERM16,A31810=17:19200,AM-65,100,100,100
;
DEVTBL DSK1,DSK2
DEVTBL TRM,RES,MEM
DEVTBL /EPP0,/EPP1
;
BITMAP DSK
SYSTEM SYSMSG.USA
SYSTEM TRM.DVR
SYSTEM EPP.DVR[1,6]
SYSTEM
SETJOB JOB2,TERM2,500K,LOGIN
SETJOB JOB3,TERM3,500K,LOGIN
SETJOB JOB4,TERM4,500K,LOGIN
SETJOB JOB5,TERM5,500K,LOGIN
SETJOB JOB6,TERM6,500K,LOGIN
SETJOB JOB7,TERM7,500K,LOGIN
SETJOB JOB8,TERM8,500K,LOGIN
SETJOB JOB9,TERM9,500K,LOGIN
SETJOB JOB10,TERM10,500K,LOGIN
SETJOB JOB11,TERM11,500K,LOGIN
SETJOB JOB12,TERM12,500K,LOGIN
SETJOB JOB13,TERM13,500K,LOGIN
SETJOB JOB14,TERM14,500K,LOGIN
SETJOB JOB15,TERM15,500K,LOGIN
SETJOB JOB16,TERM16,500K,LOGIN
;
;
MOUNT DSK1:
MOUNT DSK2:
;
MEMORY 0
```

Increase number of jobs and JOBALC statements.

Increase queue blocks

Definitions for ports on the first AM-318-10.

Definitions for the second AM-318-10.

SETJOB statements for AM-318-10 ports start here. Actual memory amounts will vary depending on use.

Sample TEST.INI File

If you use AMOS 2.2C, see *Super I/O Product Support Kit for AMOS 2.2C*, DSS-10539-00, for information on enabling Super I/O with your AM-318-10 board. If you use AMOS 2.3 or later, Super I/O is automatically enabled. If, for some reason, you want to disable it on one or more AM-318-10 boards, see the *System Operator's Guide to the System Initialization Command File*, DSO-00002-00, revision 03 or later.

TESTING THE NEW INITIALIZATION FILE

Once you've made your changes, press [ESC] and type **F** [RETURN] to save your the TEST.INI file. You're ready to test the new initialization file. Make sure no one else is using the computer, then type these commands to reboot using the new file:

```
LOG OPR: [RETURN]
MONTST TEST.INI [RETURN]
```

As the computer boots, watch the terminal screen to make sure there are no error messages. If the system boots correctly, type:

```
TRMDEF [RETURN]
```

This displays a list of the terminals defined; all of your new terminals should be listed.

If there is a problem when you reboot using TEST.INI, press the Reset button to reboot using your old initialization file. Edit TEST.INI and look for mistakes in the areas you've changed.

FINISHING THE INSTALLATION

If there are no problems and all of the terminals are defined properly, rename your TEST.INI file to AMOS32.INI so it will be your standard initialization file:

```
LOG SYS: [RETURN]
RENAME/D AMOS32.INI=TEST.INI [RETURN]
```

REPLACING A BOARD CONTAINING PORT 0

If you are replacing an AM-314 board containing port 0 (the boot port) with an AM-318-10, you must make one change to your initialization file before you install the new AM-318-10 board or your computer will not boot properly after you install the new board. You must change the interface driver used for port 0. To do so:

You do not have to follow this special procedure if you are replacing an AM-318-00 board containing port 0—the new port 0 on the AM-318-10 will initialize properly using the AM318.IDV interface driver, so you can follow the first procedure above and change your initialization file only after installing the new boards.

1. Before starting, make sure you have a good warm boot tape for your current configuration.

2. Edit your ***actual initialization file***. Do not make a copy and edit the copy.

   Be ***extremely*** careful changing your initialization file. Since you are making changes directly to your actual "live" initialization file, if you make a mistake which keeps the file from working, you will have to warm boot your computer!

3. Find the TRMDEF statement for port 0. It will look something like this:

   ```
   TRMDEF TERM1,AM314=0:19200,ALPHA,100,100,100
   ```

4. Change the interface driver from AM314.IDV to A31810.IDV.
5. Do not make any other changes to the initialization file. Save it and exit the text editor.

Once you've made this change, you cannot boot your computer using your current hardware configuration. Shut the system down and install the AM-318-10 boards as described in Chapter 2. Turn the computer back on, and it will boot properly, with port 0 coming up on the AM-318-10 board. Then, make the other necessary changes to your initialization file, as described earlier in this chapter.

ADDITIONAL DOCUMENTATION REFERENCES

For more information on defining and using serial I/O ports, see your *Eagle Series Computer Owner's Manual*. For more general information on adding and changing devices, see the *System Operator's Guide* and the *System Operator's Guide to the System Initialization Command File*.

Appendix A - External Cabling

The AM-318-10 uses the same plug-and-play external cabling kits as the AM-359 serial I/O boards. The list below shows the part number and a brief description of each of the cabling kits.

The cabling configurations described in this appendix meet the USOC (United Standards Organization Committee) Standards.

- **PDB-00359-50**—For configurations where an AM-318-10 is replacing an AM-355. The kit includes eight PRA-00243-04 cable assemblies. Each assembly has a four-foot parallel patch cord with an RJ-45 connector at one end and a modular female DB9 connector at the opposite end. You simply plug the RJ-45 connector into an AM-90 serial ports and the female DB9 into the male DB9 connector previously plugged into the AM-355 board.
- **PDB-00359-51**—Connects the AM-318-10 to an existing six-wire patch panel using a three-pair wiring system. The cable assembly has eight RJ-45 connectors with six wires each, which plug into the two AM-90 boards attached to an AM-318-10. The opposite end of the cable assembly is a female RJ-21 connector which plugs into your six-wire patch panel.

This cabling kit (PDB-00359-51) does not support DCD for modems, but it does support DTR.

- **PDB-00359-52**—Connects the AM-318-10 to an eight-wire patch panel using a four-pair wiring system. The cable assembly has six RJ-45 connectors with eight wires each, which plug into six AM-90 RJ-45 connectors. The opposite end of the cable assembly is a female RJ-21 connector which plugs into your eight-wire patch panel. This kit also includes two of the four-foot long RJ-45 to female DB9 connectors used in the PDB-00359-50 cabling kit, for the two ports not plugged into the patch panel.
- **PDB-00359-53**—Four RJ-45 to male DB25 adapters for connecting modems to the AM-318-10. This kit requires a shielded parallel patch cord with RJ-45 connectors at each end, like the 10-foot PRA-00189-10 cable in the PDB-00359-56 cabling kit described below.
- **PDB-00359-54**—Four modular RJ-45 to male DB25 adapters for connecting printers and terminals to the AM-318-10. This kit requires a shielded parallel patch cord with RJ-45 connectors at each end, like the 10-foot PRA-00189-10 cable supplied in the PDB-00359-56 cabling kit described below.
- **PDB-00359-55**—Four modular RJ-45 to female DB9 adapters for connecting a PC-AT style serial port to an AM-318-10. This kit requires a shielded parallel patch cord with RJ-45 connectors at each end, like the 10-foot PRA-00189-10 cable supplied in the PDB-00359-56 cabling kit described below.
- **PDB-00359-56**—This kit includes four (PRA-00189-10) 10 foot shielded parallel patch cords with RJ-45 connectors at each end.

The following illustrations contain signal and pinout information for each of the PDB-00359-XX cabling kits:

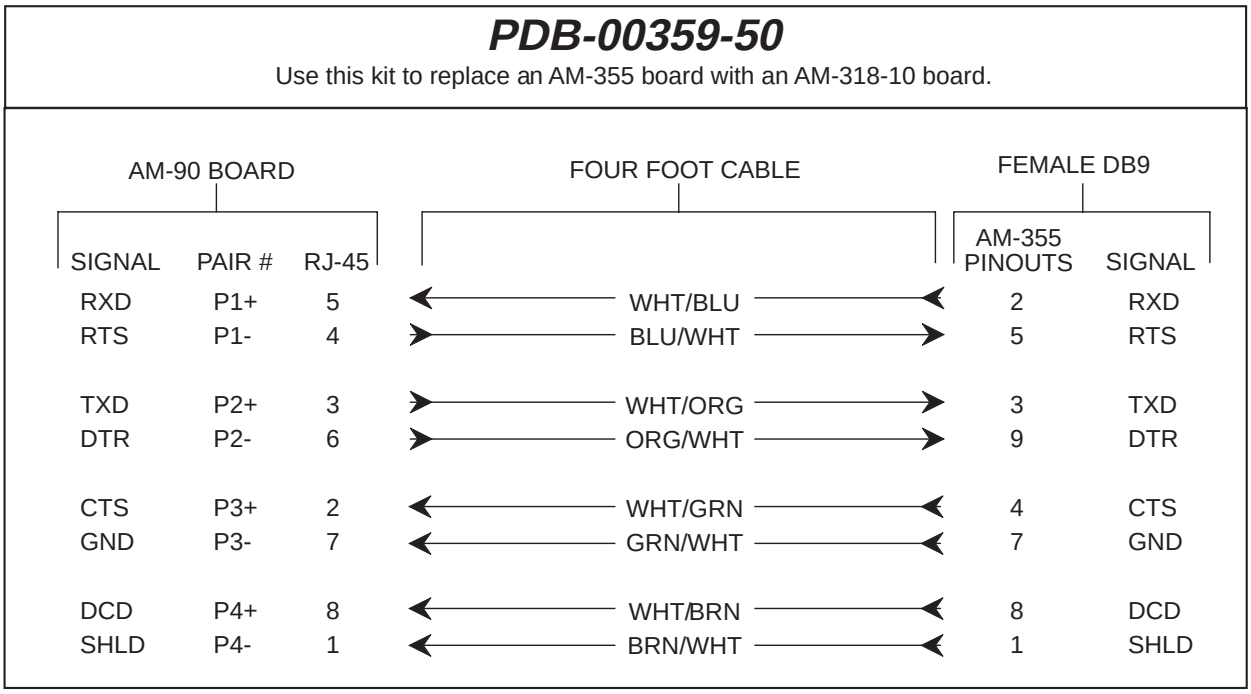

Figure A-1: PDB-00359-50 External Cabling Kit

PDB-00359-51

Use this kit to attach an AM-318-10 to an existing six-wire patch panel using a three-pair wiring system.

	AM-90 BOARD PAIR #	RJ-45		FEMALE RJ21 CONNECTOR
PORT 1	P1+	5	WHT/BLU	26
	P1-	4	BLU/WHT	1
	P2+	3	WHT/ORG	27
	P2-	6	ORG/WHT	2
	P3+	2	WHT/GRN	28
	P3-	7	GRN/WHT	3
PORT 2	P1+	5	WHT/BLU	29
	P1-	4	BLU/WHT	4
	P2+	3	WHT/ORG	30
	P2-	6	ORG/WHT	5
	P3+	2	WHT/GRN	31
	P3-	7	GRN/WHT	6
PORT 3	P1+	5	WHT/BLU	32
	P1-	4	BLU/WHT	7
	P2+	3	WHT/ORG	33
	P2-	6	ORG/WHT	8
	P3+	2	WHT/GRN	34
	P3-	7	GRN/WHT	9
PORT 4	P1+	5	WHT/BLU	35
	P1-	4	BLU/WHT	10
	P2+	3	WHT/ORG	36
	P2-	6	ORG/WHT	11
	P3+	2	WHT/GRN	37
	P3-	7	GRN/WHT	12

	AM-90 BOARD PAIR #	RJ-45		FEMALE RJ21 CONNECTOR
PORT 5	P1+	5	WHT/BLU	38
	P1-	4	BLU/WHT	13
	P2+	3	WHT/ORG	39
	P2-	6	ORG/WHT	14
	P3+	2	WHT/GRN	40
	P3-	7	GRN/WHT	15
PORT 6	P1+	5	WHT/BLU	41
	P1-	4	BLU/WHT	16
	P2+	3	WHT/ORG	42
	P2-	6	ORG/WHT	17
	P3+	2	WHT/GRN	43
	P3-	7	GRN/WHT	18
PORT 7	P1+	5	WHT/BLU	44
	P1-	4	BLU/WHT	19
	P2+	3	WHT/ORG	45
	P2-	6	ORG/WHT	20
	P3+	2	WHT/GRN	46
	P3-	7	GRN/WHT	21
PORT 8	P1+	5	WHT/BLU	47
	P1-	4	BLU/WHT	22
	P2+	3	WHT/ORG	48
	P2-	6	ORG/WHT	23
	P3+	2	WHT/GRN	49
	P3-	7	GRN/WHT	24

Figure A-2: PDB-00359-51 External Cabling Kit

PDB-00359-52

Use this kit to connect an AM-318-10 board to an eight-wire patch panel using a four-pair wiring system. This kit creates two extra eight-wire AM-355 type ports (ports 7 and 8), which have standard female DB9 connectors.

	AM-90 BOARD PAIR #	RJ-45		FEMALE RJ21 CONNECTOR
PORT 1	P1+	5	WHT/BLU	26
	P1-	4	BLU/WHT	1
	P2+	3	WHT/ORG	27
	P2-	6	ORG/WHT	2
	P3+	2	WHT/GRN	28
	P3-	7	GRN/WHT	3
	P4+	8	WHT/BRN	29
	P4-	1	BRN/WHT	4
PORT 2	P1+	5	WHT/BLU	30
	P1-	4	BLU/WHT	5
	P2+	3	WHT/ORG	31
	P2-	6	ORG/WHT	6
	P3+	2	WHT/GRN	32
	P3-	7	GRN/WHT	7
	P4+	8	WHT/BRN	33
	P4-	1	BRN/WHT	8
PORT 3	P1+	5	WHT/BLU	34
	P1-	4	BLU/WHT	9
	P2+	3	WHT/ORG	35
	P2-	6	ORG/WHT	10
	P3+	2	WHT/GRN	36
	P3-	7	GRN/WHT	11
	P4+	8	WHT/BRN	37
	P4-	1	BRN/WHT	12
PORT 4	P1+	5	WHT/BLU	38
	P1-	4	BLU/WHT	13
	P2+	3	WHT/ORG	39
	P2-	6	ORG/WHT	14
	P3+	2	WHT/GRN	40
	P3-	7	GRN/WHT	15
	P4+	8	WHT/BRN	41
	P4-	1	BRN/WHT	16

	AM-90 BOARD PAIR #	RJ-45		FEMALE RJ21 CONNECTOR	FEMALE DB9
PORT 5	P1+	5	WHT/BLU	42	
	P1-	4	BLU/WHT	17	
	P2+	3	WHT/ORG	43	
	P2-	6	ORG/WHT	18	
	P3+	2	WHT/GRN	44	
	P3-	7	GRN/WHT	19	
	P4+	8	WHT/BRN	45	
	P4-	1	BRN/WHT	20	
PORT 6	P1+	5	WHT/BLU	46	
	P1-	4	BLU/WHT	21	
	P2+	3	WHT/ORG	47	
	P2-	6	ORG/WHT	22	
	P3+	2	WHT/GRN	48	
	P3-	7	GRN/WHT	23	
	P4+	8	WHT/BRN	49	
	P4-	1	BRN/WHT	24	
PORT 7	P1+	5	WHT/BLU		2 GRN
	P1-	4	BLU/WHT		5 RED
	P2+	3	WHT/ORG		3 BLK
	P2-	6	ORG/WHT		9 YEL
	P3+	2	WHT/GRN		4 ORG
	P3-	7	GRN/WHT		7 BRN
	P4+	8	WHT/BRN		8 SLT
	P4-	1	BRN/WHT		1 BLU
PORT 8	P1+	5	WHT/BLU		2 GRN
	P1-	4	BLU/WHT		5 RED
	P2+	3	WHT/ORG		3 BLK
	P2-	6	ORG/WHT		9 YEL
	P3+	2	WHT/GRN		4 ORG
	P3-	7	GRN/WHT		7 BRN
	P4+	8	WHT/BRN		8 SLT
	P4-	1	BRN/WHT		1 BLU

Figure A-3: PDB-00359-52 External Cabling Kit

PDB-00359-53

Use this kit to connect a modem to the AM-318-10 board with full handshaking support.

AM-90 BOARD			PARALLEL PATCH CORD	MALE DB25 ADAPTER = MODEM			
SIGNAL	PAIR #	RJ-45		RJ-45		DB25 PINOUTS	SIGNAL
RXD	P1+	5	WHT/BLU	5	GRN	3	TXD
RTS	P1-	4	BLU/WHT	4	RED	4	CTS
TXD	P2+	3	WHT/ORG	3	BLK	2	RXD
DTR	P2-	6	ORG/WHT	6	YEL	20	DTR
CTS	P3+	2	WHT/GRN	2	ORG	5	RTS
GND	P3-	7	GRN/WHT	7	BRN	7	GND
DCD	P4+	8	WHT/BRN	8	SLT/WHT	8	DCD
SHLD	P4-	1	BRN/WHT	1	BLU	1	SHLD

Figure A-4: PDB-00359-53 External Cabling Kit

PDB-00359-54

Use this kit to connect all terminals and printers to the AM-318-10 board.

AM-90 BOARD			PARALLEL PATCH CORD	MALE DB25 ADAPTER = CRTs/PRINTERS			
SIGNAL	PAIR #	RJ-45		RJ-45		DB25 PINOUTS	SIGNAL
RXD	P1+	5	WHT/BLU	5	GRN	2	TXD
RTS	P1-	4	BLU/WHT	4	RED	5	CTS
TXD	P2+	3	WHT/ORG	3	BLK	3	RXD
DTR	P2-	6	ORG/WHT	6	YEL	8	DCD
CTS	P3+	2	WHT/GRN	2	ORG	20	DTR *
GND	P3-	7	GRN/WHT	7	BRN	7	GND
DCD	P4+	8	WHT/BRN	8	SLT/WHT	4	RTS
SHLD	P4-	1	BRN/WHT	1	BLU	1	SHLD

* CRT or printer busy

Figure A-5: PDB-00359-54 External Cabling Kit

Both of the above cable kits require a shielded parallel patch cord with RJ-45 connectors at each end, like the 10 foot PRA-00189-10 cables supplied in the PDB-00359-56 cabling kit.

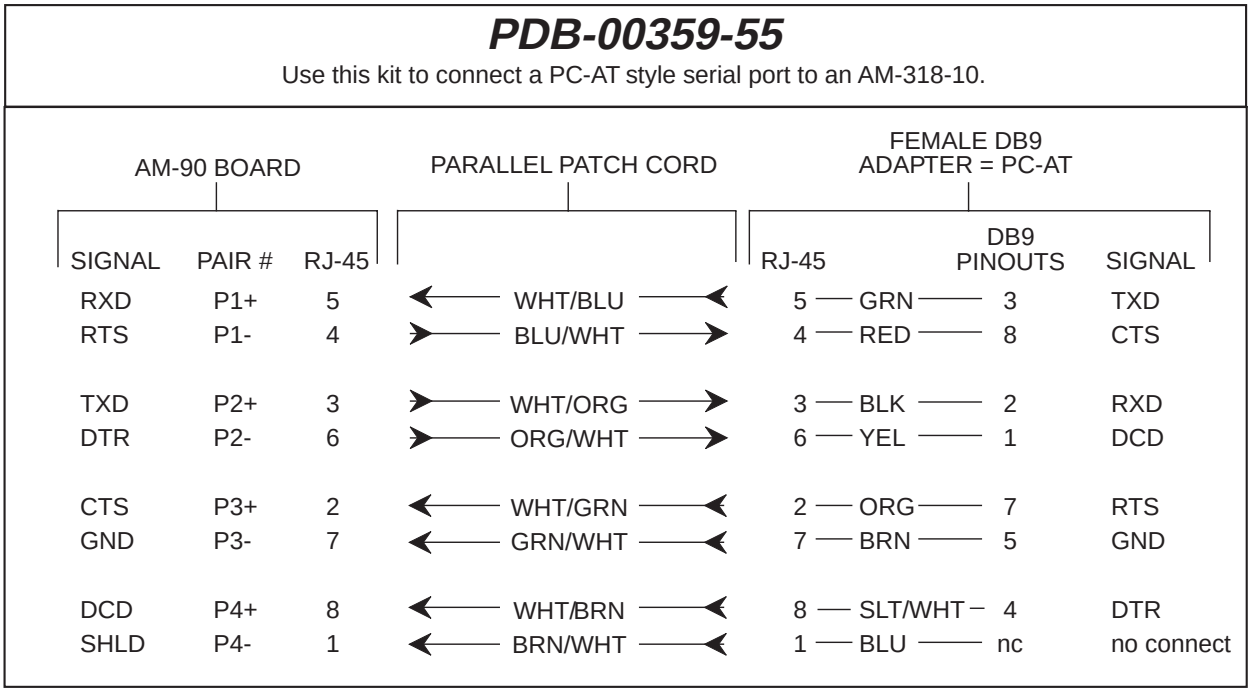

Figure A-6: PDB-00359-55 External Cabling Kit

The above cable kit requires a shielded parallel patch cord with RJ-45 connectors at each end, like the 10 foot PRA-00189-10 cables supplied in the PDB-00359-56 cabling kit.

BUILDING YOUR OWN CABLES

If you build your own cables rather than using one of the cable kits described above, please refer to your *Eagle Series Computer Owner's Manual*, DSO-00196-00, Rev. A03 or later, for general cable construction guidelines. Pinout information for each RJ-45 port on an AM-90 card attached to the AM-318-10 is as follows:

Pin #	Description	
1	Chassis ground (shield)	GND
2	Clear to send	CTS
3	Transmit data	TXD
4	Request to send	RTS
5	Receive data	RXD
6	Data terminal ready	DTR
7	Signal ground	GND
8	Data carrier detect	DCD

Pins are numbered from left to right, looking into the port from outside the computer chassis.